MULTIPLEXER AND DEMULTIPLEXER

CSE202L Digital Logic Design

Submitted by: SYEDA AFIA SHAH, MAIRA ZAFAR

Reg no: 2115, 2106

Group 4

Section C

Submitted to: Sir Rehmat ullah Khattak

17 Febuary, 2024

Department of Computer Systems and Engineering

University of Engineering and Technology Peshawar

LAB OBJECTIVES:

- Design MUX and DEMUX circuits
- Build the circuits using Logic gates

COMPONENTS:

- 7411 3-input AND gate IC
- 7432 OR gate IC
- 7404 inverter IC

MULTIPLEXERS

A multiplexer is a combinational circuit that selects binary information from one of many input lines to a single oupt line. The selection of a particular input line is controlled by a set of selection lines. Usually there are 2^n input lines and n selection lines whose bit combinations determine which input is selected.

DESIGNING 4×1 MUX CIRCUIT:

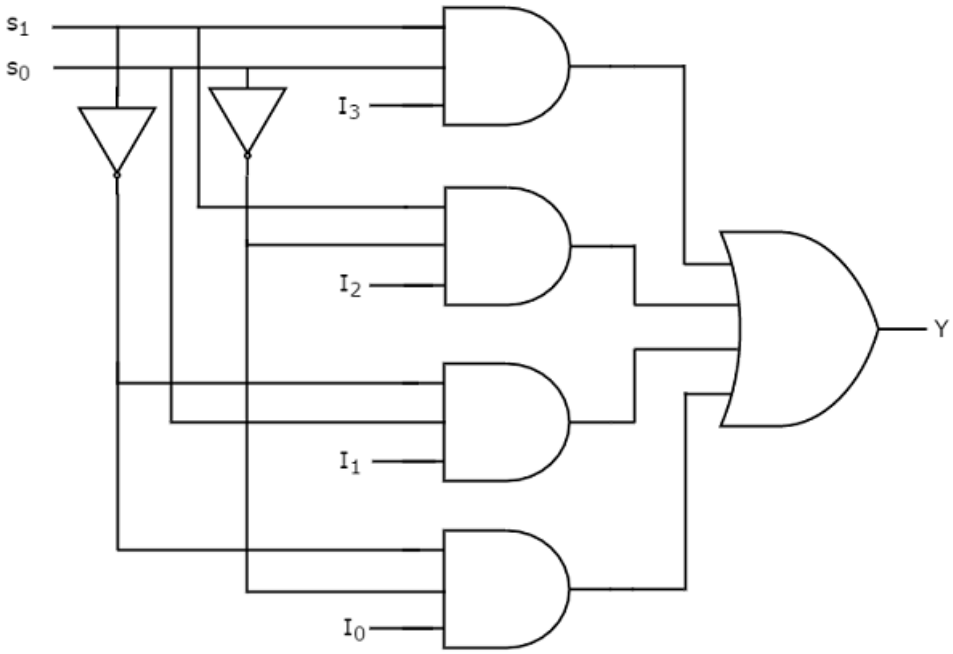

BLOCK DIAGRAM OF 4×1 MUX:

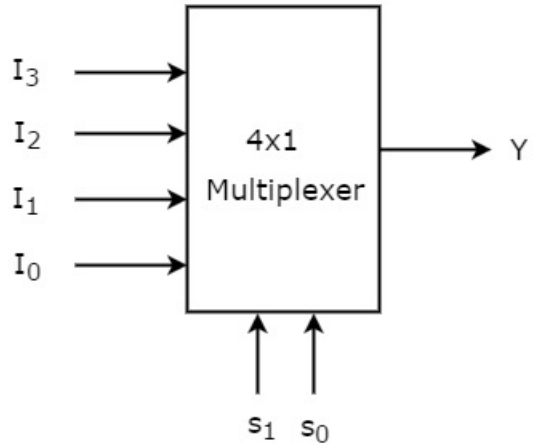

FUNCTION TABLE:

S1	S0	OUTPUT Y
0	0	D0
0	1	D1
1	0	D2
1	1	D3

APPLICATION:

A multiplexer is a digital logic component used to select one of several input signals and route it to a single output. In Computer architecture, muxes find application in various roles some of which are:

- Data Routing
- Signal selection
- Interrupt handling mechanism

INTERUPT HANDLING MECHANISM:

When CPU resources are required by several peripherals at the same time, the mux circuit selects each, one by one based on their priority.

DEMULTIPLEXER

A decoder with an enable input is referred to as a Demultiplexer. The inputs of a decoder are called select inputs in a demultiplexer.

A demultiplexer is a combinational circuit that receives information on a single line and transmits the information on one of 2^n possible output lines.

DESIGNING 1×4 DE-MUX CIRCUIT:

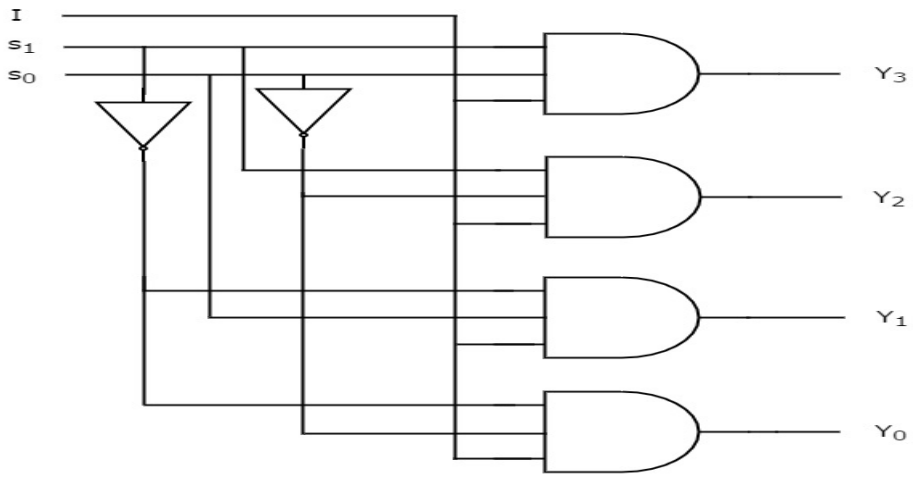

BLOCK DIAGRAM OF 4×1 DE-MUX:

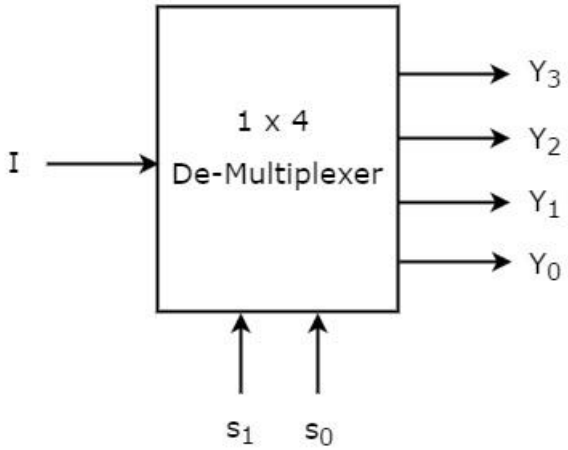

FUNCTION TABLE:

S0	S1	I	Y0	Y1	Y2	Y3
0	0	0	0	0	0	0
0	0	1	1	0	0	0
0	1	0	0	0	0	0
0	1	1	0	1	0	0
1	0	0	0	0	0	0
1	0	1	0	0	1	0
1	1	0	0	0	0	0
1	1	1	0	0	0	1

REVIEW QUESTIONS:

DIFFERENCE BETWEEN A MUX AND DEMUX:

A mux and demux are two logic components with complementay functions.

MUX	DEMUX
A mux selects one of several input data lines and routes it to a single ouput line.	A demux receives info on a single line and transmits it to several output lines.

It has one or more select inputs and a single output.	It has single input line and several output lines based on select input.
The select lines determine which input line gets connected to the output.	Demuxes have one data line, one or more select inputs, and multiple output lines.
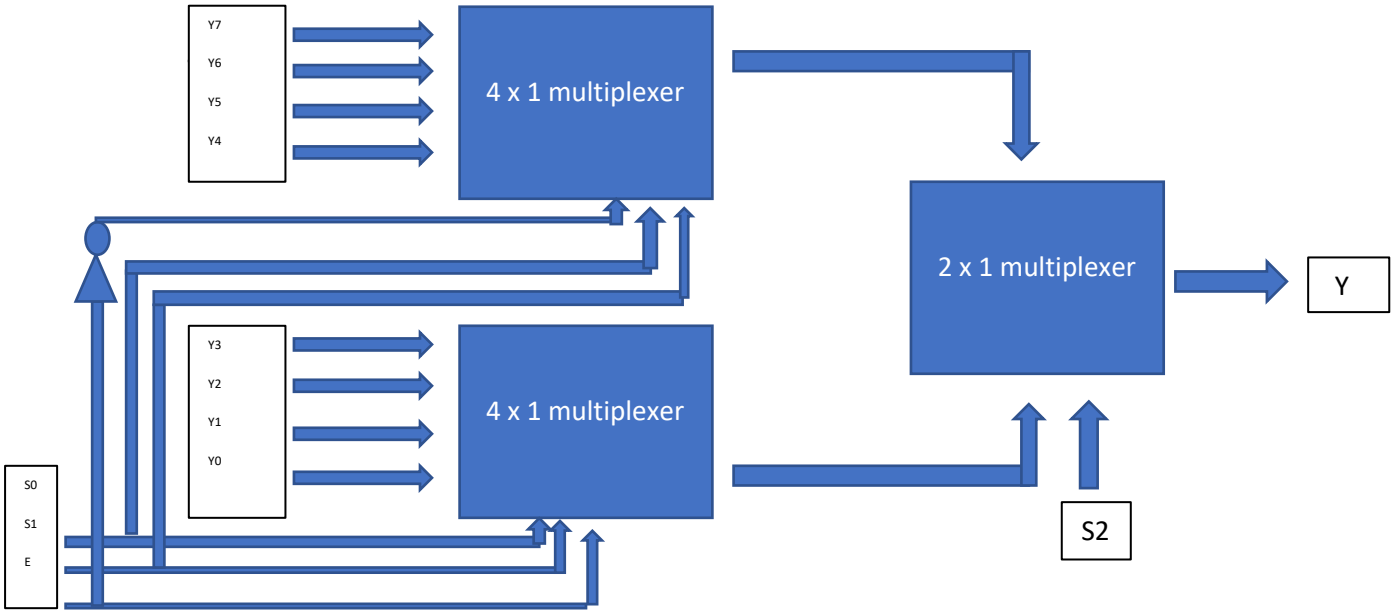
Design a 8x1 MUX using two 4x1 MUXes (74153) and a 2x1 MUX (74157).